Technical Specification
7-6105-C
2014-12-18

Sandvik DL411-7
Production Drills

The Sandvik DL411-7 is an electro-hydraulic long-hole drilling rig for large-scale production drilling in underground mines.

The rig has been designed for vertical and inclined plane rings and fans, parallel long production holes as well as long single holes. The 360° rotation and parallel coverage, together with wide tilt angle ranges forwards and backwards, make the boom suitable to various drilling applications.

Instrumentation and data drilling with various automation options allow maximum performance with superior drilling accuracy. Proven CAN-based technology on board allows the operator to set the unit for any rock conditions. It also makes the upgrade of automation level easy, and has a fault finding system, which reduces downtime.

The machine is based on a proven carrier for high mobility. Tramming is done from the operator's platform, and drilling from a remote position next to the machine.

Carrier	NC7N
Boom	ZR30
Drilling module	LFRC1600
Rock drill	HL710
Hole diameter	64-102 mm
Hole length	Up to 54 m
Control system	TPC LH
Cornering	3400 mm
Total weight	21 000 kg (depending on options)

© 2014 Sandvik Mining and Construction

Sandvik DL411-7

Coverage area

MINIMUM DRIFT SIZE

Drilling Module	H	W	W_p	H_R
LF1604	3245	3245	1450	2100
LF1605	3550	3550	1750	2100
LF1606	3855	3855	2050	2100
Included 100mm clearance on each side				

MAXIMUM DRIFT SIZE

Drilling Module	H	W	W_p	H_R
LF1604	4150	4700	3000	2100
LF1605	4250	4900	3000	2100
LF1606	4370	5100	3000	2100
With rear stinger in use without optional front stinger				

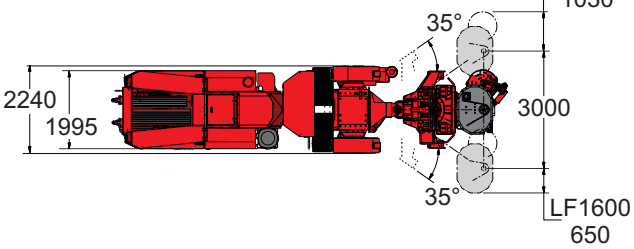

RC1600
1030

LF1600
650

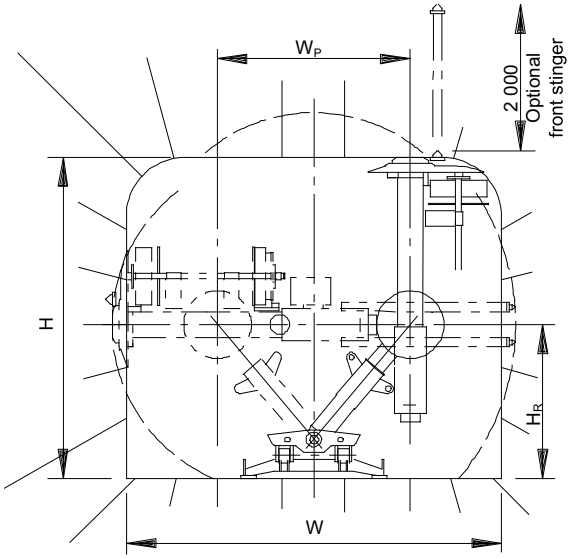

All dimensions in mm

Hydraulic rock drill

Technical Specification 2_1750

Rock Drill	HL710
Percussion power	19.5 kW
Percussion pressure	Max. 190 bar
Percussion rate	42-52 Hz
Rotation speed	Max. 180 rpm
Rotation torque (OMT250)	Max. 1335 Nm
Hole size	64 - 102 mm
Recommended drill steel	38-51 mm rods 64 mm tubes
Shank adapter	T38, T45, T51
Weight	245 kg
Length	1035 mm
Profile height	286 mm
Shank lubrication device	Air /oil mist, SLU
Shank lubrication compressor	CT10, 1m³/min (7 bar)
Air consumption	200 - 300 l/min
Oil consumption	250 - 550 g/h
#Power extractor	HL710

Boom

Technical Specification 4_1810

Boom type	ZR30
Parallel coverage	3000mm
Weight	2 800kg
Roll-over angle	360°

Drilling module

Technical Specification 3_1557

LFRC160x	x=4' / 5' /6'
Capacity	29+1 rods/tubes
Feed force	31kN
Feed extension	LF1604: 1000mm LF1605: 1100mm LF1606: 1400mm
Rod retainer	Pito 16
Cuttings collector	CC1016
Readiness for double tools	Rods/Tubes
Stinger extension	LF1604: 1500mm LF1605/6: 1700mm
#Sequence control	Automatic rod/tube changing
#Front stinger	Required for downholes

Instrumentation options

Technical Specification 5_9202

#Visual angle indicators	Spirit levels
#TMS DDS	Drilling direction, depth and speed
#Fan automation	360° fan drilling (Incl. one hole data drilling)
#One hole data drilling	Automated single hole drilling

 # Additional options features/components
**** Alternative options features/components***

Sandvik DL411-7

Machine dimensions

FEED	L
LF1604	3 000
LF1605	3 300
LF1606	3 600

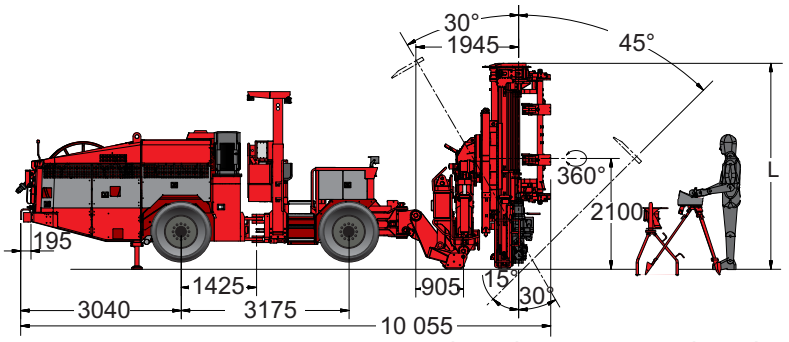

All dimensions in mm

Hydraulic system

Powerpack	HPP755 (55kW)
Percussion pump	100cc variable displacement
Rotation pump	45cc variable displacement
Boom movements pump	28cc variable displacement
Filtration size	20 microns (pressure) 10 microns (return)
Oil tank volume	270 liters
Tank filling	Electric pump
*Tank filling	Manual pump
Oil cooler	Water cooled. Cooling capacity 1x45kW
*Oil cooler	Air cooled. Cooling capacity 2x30kW N/A with water hose reel
*Biodegradable oils	Shell Naturelle HFE46/HFE68
#Vacuum pump for hydraulic oil	

Control system

Technical Specification 5_1300

Type	TPC LH
Power control	Adjustable full power Adjustable collaring power
Anti-jamming control	Adjustable anti-jamming pressure
Rotation control	Adjustable rotation speed
Flushing control	Water flushing flow and pressure control
Drilling control panel	Portable with cable remote control panel, 20m cable

Cleaning system

#Pressure cleaning system with reel	5-15 bar
#High pressure cleaning system with reel	Max. 180 bar

Greasing systems and options

#Greasing unit with reel,pump and nozzle	Manual
#Automatic greasing system	Carrier, boom and cassette

Electric system and options

Total input power	80 kW
Main switch	MSE 10
Standard voltages	380-690 VAC
*Optional voltage	1000 VAC
Starting method	Star delta starter 380 VAC-690 VAC Soft starter 480 VAC, 575 VAC (USC) Direct on Line (DOL) 1000 VAC
Voltage fluctuation	±10%
Cable reel	TCR3E with spooling system
Cable reel control	Control at operator station
Batteries	2x12V, 145Ah
*Sealed AGM batteries	2x12V, 50Ah
#Electric cable rubber or PUR	Depending on voltage (see spec 5-4100)
#Ground fault and overcurrent protection	VYK
#Auxiliary outlet	1 x 230V, 16A
#Remote control for reel(s)	At rear end
#Three phase network outlet voltage readiness	380-690VAC only
#Battery jump start	

Flushing system and options

Flushing	Water flushing flow and pressure control. Air-mist flushing, option
Water pump	WBP3
Water pump capacity	215 l/min
Water pump inlet pressure	2-7 bar
Flushing water pressure	Max. 20 bar
*Optional compressor	CT16 (11kW, 1.6m^3/min) or CT28 (18.5kW, 2.8m^3/min)
External air connection	IP5 air cleaner
#Air mist flushing packages	External water/air connection
#End of the hole flushing	1x60l air receivers, requires CT16 compressor
#Water hose reel + hose	THR2.5E +38mm (1½"), 65 meters

Fire suppression system and options

Tech. Spec. 5-9800

#Hand held fire extinguisher	1 pcs
#Manual fire suppression system	6 nozzles
#Automatic fire suppression system	6 nozzles
#FS1000	above 0°C

 # Additional options features/components
**** Alternative options features/components***

Sandvik DL411-7

Tramming dimensions

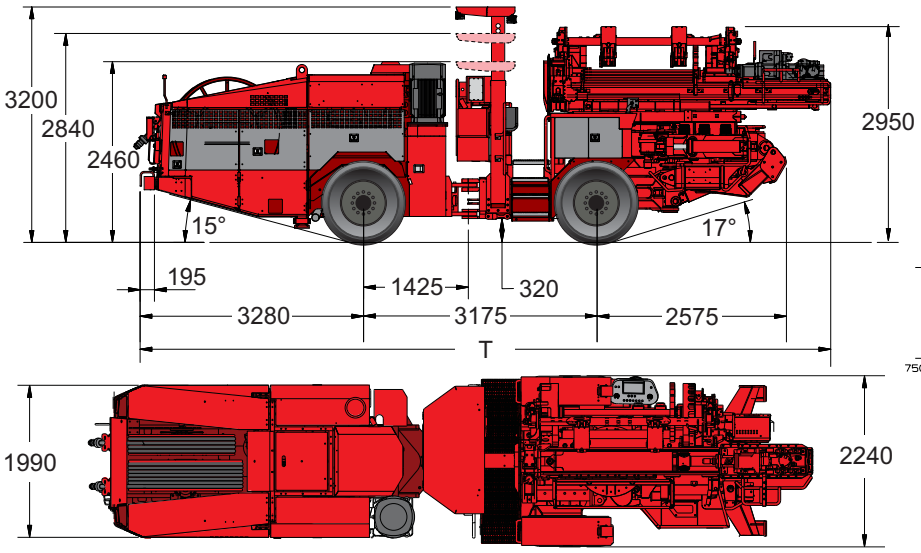

FEED	T
LF1604	8 500
LF1605	8 800
LF1606	9 100

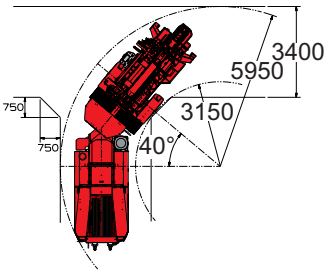

All dimensions in mm

Tramming

Tramming speed	Horizontal: 15 km/h 14% = 1:7 = 8° 6,5km/h
Gradeability / Inclination	Max. 15° / 5°
#Reduced tramming speed	3rd gear lockout

Operator's station

Safety canopy	FOPS (ISO 3449)
Sound pressure level according to EN791	Operator station: 102 dB(A) Emitted: 127 dB(A)
Seat	Ergonomic, adjustable For tramming including seat belt
Reversing alarm	Standard
#Reversing camera	On machine rear and side

Lights and options

Front lights (combined working and driving)	4 x 35W HID (24V)
Rear working lights	2 x 35W HID (24V)
Rear driving lights	2 x 35W HID (24V)
Parking Rear brake/park lights	2 x Red LED
Portable working lights	2 x 35W HID (24V)
Positioning lights	2 x Laser type
Stair and service lights	LED
#Amber flashing light	Flashing (24V)

Packages

#Regional	AUS, USC, EUR
*Harsh water packages	Basic See spec sheet 5-9100

Carrier

Carrier	NC7N
Carrier type	Wheel mounted, frame steering
Frame steering	± 40°
Rear oscillation	± 10°
Ground clearance	320 mm
Diesel engine	MB OM904LA, 110kW, Tier 3
Exhaust catalyser+muffler	Standard
Transmission	Hydrodynamic, Spicer T20 000
Axles	Spicer
Tyres	12.00-20/20RL
*Tyres	12.00-20/28PR ECR
*Optional tyres	Foam filled tyres
Service Brakes, park and emergency	SAHR type, fail safe wet disc brakes
Fuel tank	140 liters
Hydraulic jacks	Front frame stabilizer TJ60 (rear)
Hand throttle	Standard
#Fast filling system	Complete
#Wheel chocks and holders	2 pieces

Extra items

#Spare rock drill	
#Spare wheel assembly	Standard or foam filled
#Special tools for rock drill	
#Documentation	Extra manuals

 # Additional options features/components
**** Alternative options features/components***

Sandvik Mining and Construction reserves the right to change this specification without further notice.
Sandvik Mining and Construction Oy
P.O Box 100. FIN-33311 Tampere, Finland
Tel. +358 205 44 121, Fax +358 205 44 120
www.sandvik.com

© 2014 Sandvik Mining and Construction