# RUGGED AND DEPENDABLE

## 42ZV-2

- Wrap-around counterweight lowers the center of gravity increasing stability
- Universal Quick Coupler allows a wide range of attachments
- Interchangeable with skid steer attachments
- Limited Slip Differentials provide additional traction for applications requiring extreme traction control
- Bucket Leveler
- Reliable Kubota Engines, supported locally
- Third spool hydraulics, standard
- High Ground Speed, standard

## 45ZV-2

- Wrap-around counterweight lowers the center of gravity increasing stability
- Eco Mode provides a fuel efficient setting resulting in better fuel economy without affecting productivity
- Electronically controlled HST stabilizes engine speeds providing smooth acceleration and deceleration
- Manually Locking Front Differential, option
- Bucket Leveler
- Reliable Kubota Engines, supported locally
- Third spool hydraulics, standard
- Easy access to cab on both sides of machine
- High Ground Speed, standard

Kawasaki articulated wheel loaders incorporate innovative design features coupled with extensive knowledge and experience gained from real-world applications. Kawasaki pioneered Z-Link design to provide unmatched utility, high breakout force and efficiency in its machines.

Kawasaki provides a totally focused approach to support your business. Kawasaki offers a full range of wheel loaders to handle virtually any task. Kawasaki engineers work with end users all over the country to access and review their wheel loader needs. With inhouse special application engineers, Kawasaki is capable of responding to new industry demands quickly with comprehensive solutions.

Kawasaki designs and builds world-class wheel loaders with an established reputation for quality and reliability. The sales and service operations are headquartered in Kennesaw, Georgia, near Atlanta. Fabrication and machine assembly takes place at the company's Newnan, Georgia plant.

## SERVING THE NORTH AMERICAN MARKET SINCE 1962

- 15 models, 45 HP to 720 HP
- Comprehensive support services
- Unmatched parts availability
- Cost-effective component exchange program
- Predictive maintenance programs
- Extensive dealer network covering the North American Market

# 42ZV-2 / 45ZV-2

## FORK DATA

| | | | 42ZV-2 | 45ZV-2 |
|---|---|---|---|---|
| Fork Tine Length | | ft-in (mm) | 48" (1,219) | 48" (1,219) |
| Reach @ Ground Level | | ft-in (mm) | 2' 11" (895) | 2' 6" (755) |
| Maximum Reach | | ft-in (mm) | 4' 10" (1,475) | 4' 5" (1,340) |
| Reach @ Max Hinge Pin Height | | ft-in (mm) | 2' 6" (750) | 2' 3" (680) |
| Fork Height @ Max Reach | | ft-in (mm) | 4' 11" (1,505) | 5' (1,530) |
| Fork Height @ Max Hinge Pin Height | | ft-in (mm) | 10' 2" (3,105) | 10' 1½" (3,090) |
| Straight Tip Load with Level Arms and Fork (load centered @ 24") | | lb (kg) | 4,350 (1,975) | 6,280 (2,850) |
| Full Turn Tip Load with Level Arms and Fork (load centered @ 24") | | lb (kg) | 3,570 (1,620) | 5,310 (2,410) |
| Max Operating Load | | lb (kg) | 2,160 (980) | 3,240 (1,470) |
| Fork Attachment Weight | | lb (kg) | 359 (163) | 685 (310) |
| Operating Weight | | lb (kg) | 8,960 (4,065) | 12,100 (5,490) |
| Miminum turning radius (at outside tire) | | ft-in (mm) | 13' 8" (4,165) | 14' 10" (4,520) |
| Overall | Length | ft-in (mm) | 18' (5,475) | 19' 3" (5,860) |
| | Height | ft-in (mm) | 8' 5" (2,565) | 9' 4" (2,860) |
| | Width (outside tire) | ft-in (mm) | 5' 5⅜" (1,690) | 6' 3⅝" (1,920) |

The weight and load figures include counterweight, coupler, 48" forks, 15.5/60-18 tires (42ZV-2), 17.5/65-20 (45ZV-2) tires, enclosed ROPS Cab, full fuel tank, and operator.

Materials and specifications are subject to change without notice and without obligation on the part of the manufacturer. The specifications supplied, while believed to be completely reliable, are not to be taken as warranty for which we assume legal responsibility.

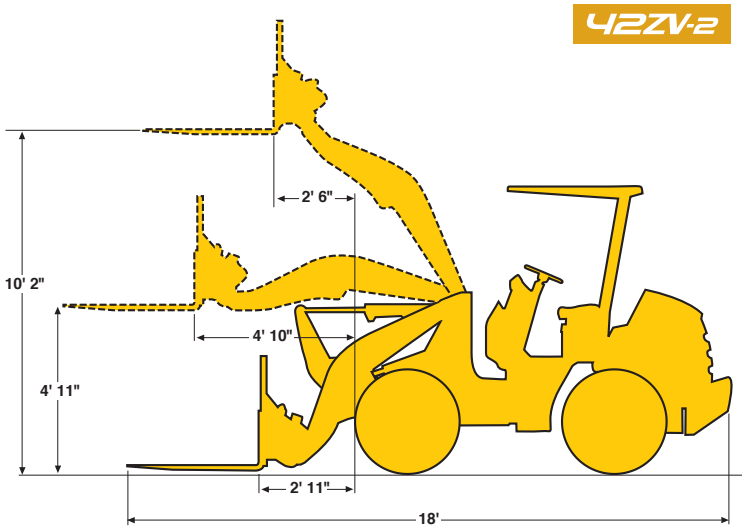


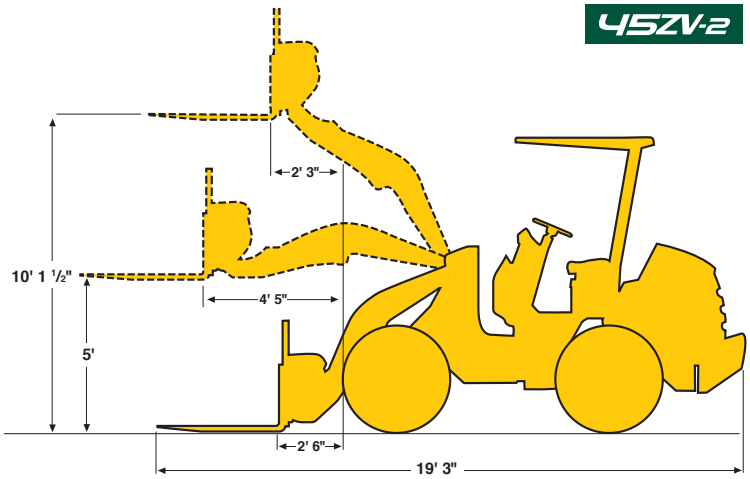



KCMA Corporation

2140 Barrett Park Drive • Suite 101
Kennesaw, Georgia 30144
www.kawasakiloaders.com

Tel: 770-499-7000
Fax: 770-421-6842